ECU1-1808N-B3S2

Extended Range Proximity Sensor

Note: The product images shown may change over time as products are updated.

Dimensions

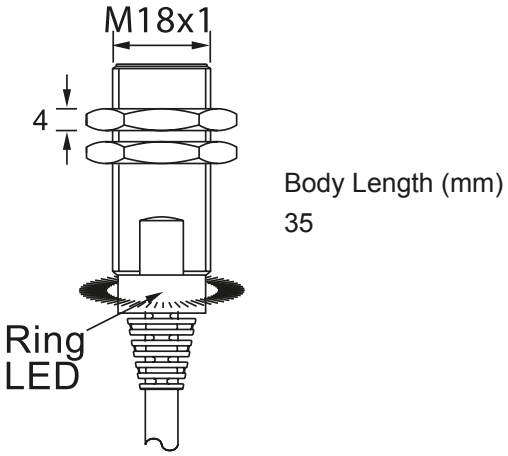

Part Number

ECU1-1808N-B3S2

Features

Inductive Proximity Sensors are used in a wide variety of manufacturing operations where a metal target needs to be sensed. HTM Sensors inductive proximity sensors have a Lifetime Warranty, a CSA or UL approval, and a huge inventory for same-day shipping. For tougher applications where the sensors need more range to stay out of harm's way, or to withstand high temperatures, weld spatter, chemical exposure, oil or other rough environments, HTM Sensors has the widest range of proximity sensors on the market.

Connection

NPN Normally Closed

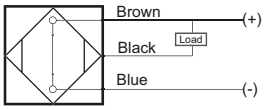

Technical Data

Body Style	Cylindrical
Sensor Housing Material	Stainless Steel SUS303
Sensor Face Material	PBT Plastic
Mounting Style	Shielded
Diameter	18 mm Threaded
Sensing Range:	8 mm Range
Output Type:	NPN Output
Output Function	Normally Closed Output
Connection	Pre-Three Wired Cable Connect
Connector Type	Cable
Operating Voltage	10-30 VDC
Switching Frequency	500 Hz
Operating Temperature	-25 ºC – +70 ºC
Current Consumption	<10 mA
IP Rating:	IP67
EMC Rating	RFI>3V/m / EFT>1kV / ESD>4Kv (contact)
Shock Rating:	IEC 60497-5-2 Part 7.4.1&7.4.2
Short Circuit Protected	Yes
Reverse Polarity Protected	Yes
Max Current	200 mA
Leakage Current	<0.01 mA
Surge Current	-
Response Time	0.5 ms/0.5 ms
Hysteresis	<15%(Sr)
Overload Trip Point	≥220 mA
Weld Field Immune	No
Weld Spatter Resistant	No
Body Length (mm)	35

In the USA: 1889 Maryland Ave., Niagara Falls, NY 14305
In Canada: 3419 Mainway, Burlington, ON L7M 1A9
Toll Free: 1-800-644-1756 • Fax: 888-283-2127
service@htmsensors.com