ASSR4-5/3NA-PZ12

Distribution Block

Single Occupancy

Note: The product images shown may change over time as products are updated.

Diagram

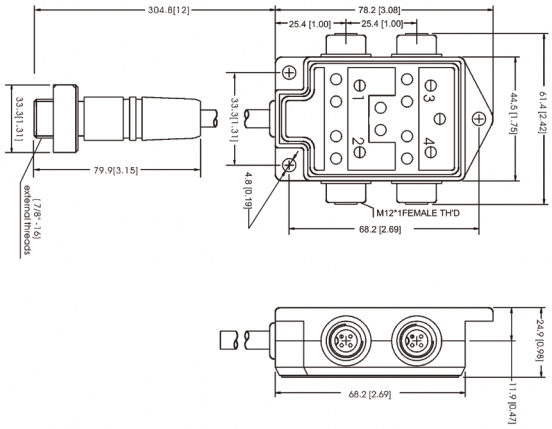

Part Number

ASSR4-5/3NA-PZ12

Features

4, 6 or 8 port distribution blocks make sensor connections easy and fast. Available in single occupancy ports or double occupancy ports for use with splitter cables to connect 2 sensors to each port. Available in 12-pin or 19-pin connectors or with a 5 m or 10 m prewired cable.

For additional information, contact HTM Sensors at 800-644-1756 or service@htmsensors.com

Wiring

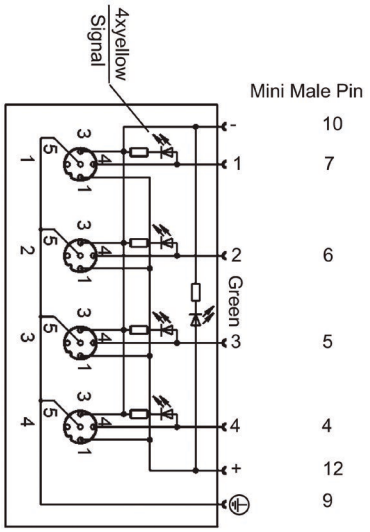

Technical Data

Number of Ports	4
Port Size	M12 A Coded
Port Location	Side
LED Circuit	NPN
Home Run Connection	Mini 12 Pin Pigtail
Home Run Location	Side
Length	-
Jacket Type	-
Rated Voltage	10-30V DC
Rated Current	4 Amp Max per Port / 12 Amps Max per Block
IP Rating	IP65
Operating Temperature	-15 C to + 90 C
Vibration Rating	IEC-68-2-6
Shock Rating	IEC-68-27
Housing Material	Nylon 6/6
O-Ring	Viton
Contact Carrier	PUR
Home Run Connector Body	PUR

In the USA: 1889 Maryland Ave., Niagara Falls, NY 14305
In Canada: 3419 Mainway, Burlington, ON L7M 1A9
Toll Free: 1-800-644-1756 • Fax: 888-283-2127
service@htmsensors.com